ALLWELL Thermoelectric Cigar Cooler Humidor

Model # : AW-48/AW-65/AW-78

INSTRUCTION MANUAL



AW-48



AW-65



AW-78

Congratulations on your new ALLWELL product. To ensure proper operation, please read this Instruction Manual carefully before using this product. Keep this manual in a safe place for future reference.

Zhongshan Allwell Electric Appliances Co.,Ltd

Table of Contents

	PAGE
Safety Precautions	3 - 4
Parts	5
Introduction / Technical Data	6
About Cigars / Terminology	7
Installation	8
Operation and Controls	9
Care and Maintenance	10
Troubleshooting	11
Warranty Information	12

APPLIANCE SAFETY

Your safety and the safety of others are very important to us.

To reduce the risk of fire, electrical shock, or injury when using your appliance, follow these basic precautions



This is the Safety Alert Symbol. This symbol alerts you to potential hazards that may result in serious injury. All safety messages will follow the Safety Alert Symbol and either the words" DANGER" or "WARNING".



Danger means that failure to heed this safety statement may result in severe injury or death.



Warning means that failure to heed this safety statement may result in extensive product damage, serious injury, or death.



Caution means that failure to heed this safety statement may result in minor or moderate injury, or property or equipment damage.

All safety messages will alert you to know what the potential hazard is, tell you how to reduce the chance of injury, and let you know what can happen if the instructions are not followed.

IMPORTANT SAFEGUIDES



Before the appliance is used, it must be properly positioned and installed as described in this manual, please read the manual carefully. To reduce the risk of fire, electrical shock or injury when using the appliance, follow basic precaution, including the following:



- Plug into a grounded 3-prong outlet, do not remove grounding prong, do not use an adapter, and do not use an extension cord.
- Do not use if the power supply cord is damaged. If damaged, it must be replaced by a qualified electrician.
- It is recommended that a separate circuit, serving only your appliance be provided. Use receptacles that cannot be turned off by a switch or pull chain.
- Never clean appliance parts with flammable fluids or harsh chemicals. These fumes can create a fire hazard or explosion.
- Do not store or use gasoline or other flammable vapors and liquids in the vicinity of the appliance or any other appliance.
- Before proceeding with cleaning and maintenance operations, make sure to unplug the appliance.
- Do not connect or disconnect the electric plug with wet hands.
- Do not attempt to repair or replace any part of your appliance unless it is specifically recommended in this manual. All other servicing should be referred to a qualified technician.

Safety Precautions



FOLLOW WARNING CALL OUTS BELOW ONLY WHEN APPLICABLE TO YOUR MODEL

- Use two or more people to move and install the appliance. Failure to do so can result in injury.
- When positioning the cigar cooler humidor, ensure that there is at least a 4" clearance at the sides and a 6" clearance at the back. This will allow for adequate ventilation of any heat generated by the cigar cooler humidor.
- It is recommended you install the appliance in a place where the ambient temperature is between 68º-80ºF. This appliance must be installed in an area protected from the element, such as wind, rain, water spray or drips.
- The appliance should not be located next to ovens, grills or other sources of high heat.
- The appliance must be installed with all electrical connections in accordance with state and local codes.
- The fuse (or circuit breaker) size should be 15 amperes.
- It is important for the appliance to be leveled in order to work properly. For a stable installation, make sure the appliance is placed on a flat, level and solid surface.
- Ensure that the surface on which the appliance is placed is strong enough to hold the appliance and the items stored inside.
- This appliance is not intended for use by young children or physically-challenged persons without supervision/assistance. Young children must be supervised to ensure safety around this or any appliance.
- Do not use solvent-based cleaning agents of abrasives on the interior. These cleaners may damage or discolor the interior.
- Keep fingers out of the "pinch point" areas. Clearance between the doors and between the doors and cabinet are necessarily small. Be careful closing doors when children are in the area.
- The temperature range for this cigar cooler humidor designed to store and age cigars within the optimal humidity range of 62 % to 75% at a room temperature.
- Close the cigar cooler humidor immediately after putting in any items to keep the internal temperature relatively constant.
- Avoid placing any objects on top of the appliance.
- This is an electrical appliance, to avoid injury from electrical shock do not operate the unit with wet hands, while standing on a wet surface or while standing in water. Do not use outdoors or in wet conditions.
- When positioning or moving the appliance, ensure that it is not turned up side down or unleveled greater than 45°.
- Never pull the power cord to disconnect it from the outlet. Grasp the plug and pull it from the outlet.
- Never lift, carry or drag the appliance by the power cord.
- This appliance is designed for household, non-commercial use only. Any other use will void the warranty.
- Do not plug into the power outlet before set up is completed.
- Do not cut or remove the ground prong from the power cord.
- Do not move this appliance without emptying it and securing the door in a closed position.

Parts and Controls

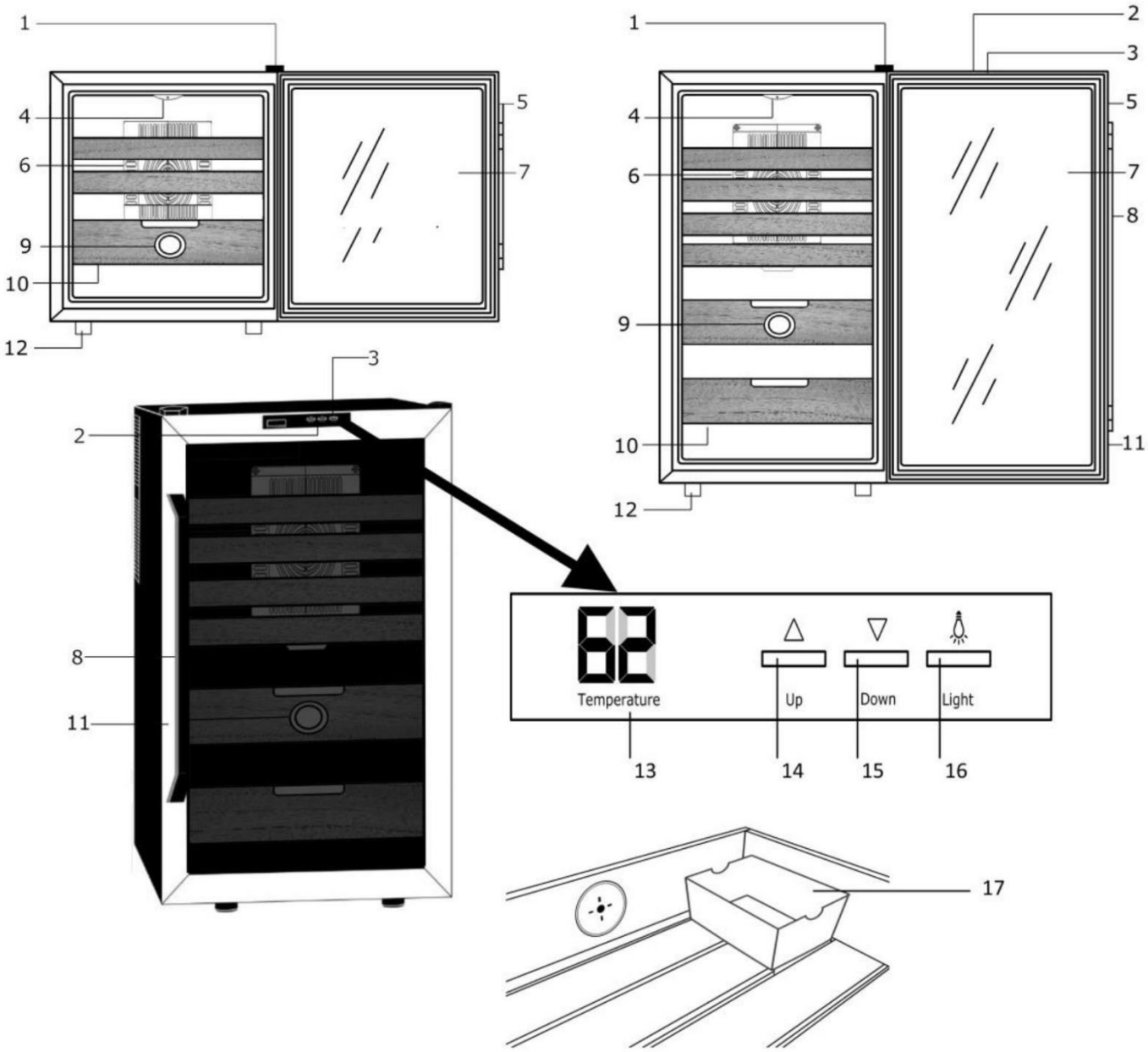

1. Hinge Cover
2. Temperature Control
3. Light Switch
4. Light
5. Door Seal
6. Internal Fan
7. Glass Door
9. Hygrometer

10. Removable Spanish cedar drawers and shelves
12. Leveling Legs (3 big, 1 small under door hinge
13. Temperature Display
14. Up Button
15. Down Button
16. Light Switch
17. Humidity Tray

Introduction to Cigar Cooler Humidors

Our ALLWELL Cigar Cooler Humidor is designed to store and age cigars within the optimal humidity range 62% to 75% at room temperature. Our humidors contain a humidification system and equipped with a hygrometer which helps maintain the desired level of humidity. In addition to its main purpose of storing, preserving and aging cigars for a number of years, ALLWELL Cigar Cooler Humidor is also an attractive and elegant piece of appliance.

- Capacity:48L/65L/78L
- Freestanding setup
- Vibration-free thermoelectric cooling
- Professional quality INVESSIBLE handle
- Removable Spanish cedar drawers and shelves
- AW-48 - 3 drawers/AW-65 - 4 drawers/AW-78 - 4 drawers
- Adjustable thermostat with temperature range from 54ºF - 64ºF
- Enhanced LCD temperature display
- Soft interior LED lighting with on/off switch
- Solid state components for long life- the only moving parts are fans to circulate air for even
- temperature distribution

TECHNICAL DATA

Iterm: AW-78	Iterm: AW-65	Iterm: AW-48
Capacity：78L, loads 600pcs cigars	Capacity：78L, loads 500pcs cigars	Capacity：48L, loads 400pcs cigars
Temperature Range:12-18℃	Temperature Range:12-18℃	Temperature Range:12-18℃
Humidity Range:＞50%	Humidity Range:＞50%	Humidity Range:＞50%
Power Input: 78W	Power Input: 70W	Power Input:65W
Power Consumption:0.4kw.h/24h	Power Consumption:0.35kw.h/24h	Power Consumption:0.3kw.h/24h
Blue/White LED light	Blue/White LED light	Blue/White LED light
Body dimension:400x512x848mm	Product Dimension: 460x540x735mm	Body dimension:355x503x645mm
Packing dimension:430x545x878mm	Packing Dimension:510x570x780mm	Packing dimension:375x525x665mm
Net/Gross weight: 40kg/43kg	Net/Gross weight: 23kg/25kg	Net/Gross weight: 16kg/18kg

About Cigars/Terminology

Amatista	A glass jar containing 50 (or 25) cigars, sealed and sold "factory fresh".
Band	Ring of paper wrapped around the closed head of most cigars.
Binder	Portion of a tobacco leaf that holds the filler leaves together.
Blend	The mixture of different types of tobacco in a cigar, including up to five types of filler leaves, a binder leaf and an outer wrapper.
Bloom	Harmless white film caused by tobacco oils rising to the surface of the cigar wrapper. Often indicates a strong taste. (Also called Plume).
Bouquet	Used to describe the smell of a fine cigar and fine wines.
Bunch	Filler tobacco used to create the body of a cigar.
Cap	A circular piece of wrapper leaf used to secure the wrapper at the cigar head.
Cigarillos	Thin, three-inch cigars, popular in Europe, generally machine-made.
Draw	Amount of air that gets pulled through a lit cigar. Easy/hot or tight/plugged.
Flag	Instead of a cap, flags are an extension of the wrapper leaf used to finish the head of a cigar. Sometimes tied off in a pigtail or a curly head.
Foot	The end of the cigar that you light. Often pre-cut.
Head	The closed end of the cigar that you put into your mouth.
Hot	A cigar draw that is too easy, often because it has been under-filled.
Hygrometer	Device used to measure humidity or percentage of moisture in the air.
Long Filler	Whole tobacco leaves used to fill a cigar; these leaves are long and can run the length of the cigar's bunch. Long filler should burn evenly and consist-ently.
Piercer	Used to cut/pierce a small hole in the end of a cigar (also called a 'lance').
Plug	A blockage that prevents a cigar from drawing properly. (Gently massaging the cigar may relieve a plugged draw).
Ring Gauge	Diameter of a cigar's barrel, expressed in 64ths of an inch. A half-inch cigar would be a 32 ring (32/64).
Short Filler	Cigar bunch comprised of scraps of tobacco (parts of leaves and twigs).
Shoulder	Where the cap of the cigar meets the barrel. The cigar will unravel if cut.
Tunneling	Uneven burning of a cigar which occurs when a wrapper does not ash.
Wrapper	High-quality tobacco leaf wound around the finished bunch and binder.

Installation

INSTALLATION OF YOUR APPLIANCE

- The appliance is designed for a free standing installation.
- **WARNING**: Do not store or install the appliance outdoors.
- **CAUTION**: This appliance is designed for designed to storing and aging cigars . Do not store perishable food, medicine or other medical products.
- Place your appliance on a hard and level floor that is strong enough to support it when it is fully loaded.
- To level your appliance, adjust the leveling legs at the bottom of the appliance if needed.
- When positioning the appliance, ensure that there is at least a 4" clearance at the sides and a 6" clearance at the back. This will allow for adequate ventilation of any heat generated by appliance.
- We do not recommend installing the appliance on carpet.
- Do not install the appliance near an oven or other heating source. Direct sunlight may affect the acrylic coating and heat sources may increase electrical consumption. For best performance, do not install the appliance behind a cabinet door or block the base grille. Extreme cold ambient temperatures may also cause the appliance not to perform properly.
- Avoid locating the appliance in area that may be exposed to excessive moisture.
- Plug in the appliance into an exclusive, grounded wall power outlet. Do not under any circumstances cut or remove the third (ground) prong from the power cord. Any questions concerning power and/or grounding should be directed toward a qualified electrician or an authorized service center.

ELECTRICAL CONNECTION



WARNING: Improper use of the grounded plug can result in the risk of electrical shock. If the power cord is damaged, have it replaced by a qualified electrician or contact ALLWELL Service Department.

This appliance requires a standard 115/120 Volt AC ~/60Hz electrical ground outlet with three-prong. Have the wall outlet and circuit checked by a qualified electrician to make sure the outlet is properly grounded. The cord should be secured behind the appliance and not left exposed or dangling to prevent accidental injury.

The appliance should always be plugged into its own individual electrical outlet which has a voltage rating that matches the rating label on the appliance. This provides the best performance and also prevent over-loading house wiring circuits that could cause a fire hazard from overheated. Never unplug the appliance by pulling the power cord. Always grip the plug firmly and pull straight out from the receptacle. Repair or replace immediately all power cords that have become frayed or otherwise damaged. Do not use a cord that shows cracks or abrasion damage along its length or at either end. When moving the appliance, be careful not to damage the power cord.

EXTENSION CORD

Because of potential safety hazards, it is strongly recommended that you do not use an extension cord with this appliance. However, if you must use an extension cord, it is absolutely necessary that it be a UL/CUL-Listed, 3-wire grounding type appliance extension cord having a grounding type plug and outlet and that the electrical rating of the cord be 115 volts and at least 10 amperes.

Operation and Controls

It is recommended you install the appliance in a place where the ambient temperature is between 68º-80ºF. If the ambient temperature is above or below recommended temperatures, the performance may be affected. For example, placing your appliance in extreme cold or hot conditions may cause interior temperatures to fluctuate.

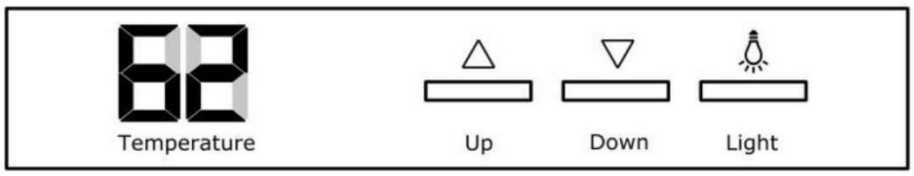

SETTING THE TEMPERATURE

The interior temperature can be adjusted in increments of 1 degree (50°F - 66°F for CHC-120S and 54°F - 66°F for CHC-251S). You can set the temperature by pressing the Up and Down buttons on the control panel. Keeping to a storage temperature of between 50/54°F - 66°F is essential for preserving the quality of cigars .

INTERIOR LIGHT

You can turn on and off the interior light by pressing the “Light” button on the control panel.

LEVELING THE APPLIANCE

It is important for your appliance to be leveled in order to work properly. It can be raised or lowered by rotating each of the feet on the bottom of the machine. If you find that the surface is not level, rotate the feet until the appliance becomes level .You may need to make several adjustments to level it. We recommend using a carpenter’s level to check the machine.

Note: This unit has 3 large levelling legs and 1 small levelling leg under the door hinge.

1. Place a carpenter’s level on top of the product to see if the appliance is level from front to back and side to side.
2. Adjust the height of the feet as follows: Turn the leveling feet to the right to lower that side of the refrigerator. Turn the leveling feet to the left to raise that side of the refrigerator.



HUMIDITY CONTROL

- This appliance is equipped with a system for maintaining the correct level of humidity. Fill the humidity tray (small plastic reservoir) to about ¾ full with 100% distilled water, then place it onto the runners found on the top shelf of the appliance. Check the water level regularly and refill as necessary.
- Please ensure the reservoir is positioned correctly on the runners on the top shelf to avoid the possibility of water spillage.

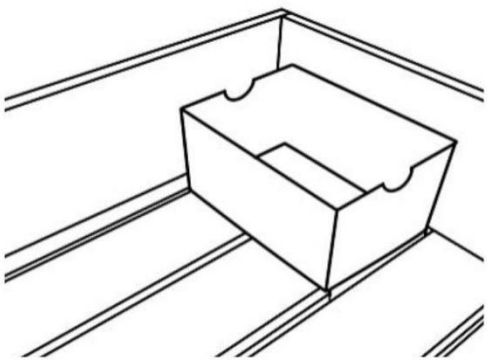

HYGROMETER

This unit is equipped with a hygrometer, which is a gauge used to measure humidity levels inside the humidor. It is recommended to maintain a humidity level of 62% to 75% inside of a humidor to properly preserve and age cigars.

Care and Maintenance

CAUTION: Failure to unplug the appliance could result in electric shock or personal injury

CLEANING YOUR APPLIANCE

- Turn off the power, unplug the appliance, and remove all cigars from the appliance and store them in a suitable place.
- Clean the inside, the door seal and the inside of the glass with a clean, damp cloth.
- Never use detergents or other substances that emit odors.
- Always keep the door closed when cleaning the outside of the appliance. Make sure no detergent odors penetrate into the appliance.
- Clean the side panels and door surfaces with a clean and soft cloth. If necessary, use a moist cloth. Alternatively, use a microfiber cloth.
- The humidity tray should be hand-washed with water and detergent. After cleaning, always make sure the tray is thoroughly rinsed with clean water before replacing.

VACATION TIME

- Short vacations: Leave the appliance operating during vacations of less than two days.
- Long vacations: If the appliance will not be used for an extended period, remove all items and turn off the appliance. Clean and dry the interior thoroughly.

MOVING YOUR APPLIANCE

- Remove all items inside the appliance.
- Securely tape down (we recommend using painter's tape) all loose items (shelves) inside your appliance.
- Turn the adjustable leg up to the base to avoid damage.
- Tape (we recommend using painter's tape) the door shut.
- Be sure the appliance stays secure in the upright position during transportation and protect the exterior of appliance with a blanket, or similar item.

PREPARING FOR STORAGE

If the appliance will not be used for a long time, or is to be moved to another place, it will be necessary to defrost the unit and dry the interior.

1. Disconnect the appliance from the power supply by removing the power plug from the wall socket.
2. Leave the door open to allow for air circulation and to prevent mold, mildew and unpleasant smells.
   CAUTION*: Store the unit out of the reach of children. If you have children, you may want to take additional precautions such as removing the door to prevent a child from being trapped inside the appliance.*



IMPORTANT:

• Do not touch the power plug when your hands are wet.
• Never unplug the unit by pulling on the plug.

ENERGY SAVING TIPS

- The appliance should be located in the coolest area of the room, away from heat producing appliances, and out of any direct sunlight.
- Ensure that the appliance is adequately ventilated. Never obstruct the air vents.
- Close the door tightly and do not open the appliance too frequently or for a long period of time.
- Store the content in an organized way.
- Do not over-fill the appliance to allow air to circulate.

Troubleshooting

Problem	Possible Causes	Solutions
The appliance does not operate	• There is a power failure. • The appliance is not plugged in. • A house fuse has blown or the circuit breaker is tripped.	• Ensure the appliance is plugged in and the power outlet has power. • Replace the broken fuse or reset the breaker.
The appliance is not reaching the desired temperature	• The appliance is placed too close to a heat source • The door is opened too often. • The door is not closed completely. • The door gasket does not seal properly.	• Adjust the temperature. • Keep the appliance away from sunshine or other heat sources. • Close the door tightly and do not open the door too frequently or for a long period of time. • Ensure the door gasket is not loose..
Frost forming inside the appliance	• The environment is too humid. • The ambient temperature is too low. • The door is opened too frequently for a long period of time.	• Although this unit uses an auto-defrost system, under certain conditions, manual defrosting may required. If frost builds up, try running the cooler on a warmer temperature setting. • Close the door tightly and do not open the door too frequently or for a long period of time. • Unplug the unit to allow the frost to melt.
The appliance turns itself on and off frequently	• The ambient (room) temperature is too low or high. • A large amount of contents has been added to the appliance. • The door is opened too often. • The door is not closed completely. • The door gasket does not seal properly.	• Decrease or increase the ambient (room) temperature. • To minimize internal temperature fluctuation, do not add large amount of contents at once. • Close the door tightly and do not open the door too frequently or for a long period of time. • Ensure the door gasket is not loose.
The appliance makes too much noise	• If the noise is from the fan, it may be normal operating noise. • Contraction and expansion of the inside walls may cause popping and crackling noises. • The appliance is not level.	• The fan makes normal fan noises. • Some popping or cracking noises are normal. They are caused by expansion and contraction of the inside walls due to temperature changes. • Make sure the unit is on a hard and level surface. Do not place the appliance on carpet.
The door does not close properly	• The appliance is not level. • The door was reversed and not properly installed. • The shelves are out of position .	• Make sure the appliance is on a hard and level surface. Avoid placing the appliance on a carpeted or soft surface. • Reinstall door. • Correctly install the shelves.
Condensation builds up on the glass door.	• Ambient temperature or humidity is high.	• Lower the room humidity by a dehumidifier or air conditioner.
Frost forming inside the appliance.	• Drawer(s) blocking internal fan. • Items are blocking the internal fan.	• Move drawer(s) to the bottom portion of the appliance • Move items so they do not block the fan.

ONE YEAR LIMITED WARRANTY

This ALLWELL Cigar Cooler Humidor is warranted, to the original owner within the 48 continental states, for one year from the date of purchase against defects in material and workmanship under normal use and service. Should your ALLWELL Cigar Cooler Humidor prove defective within one year from the date of purchase, return the defective part or unit, freight prepaid (within two months of purchase; after two months to one year, customer will be responsible for freight cost to ALLWELL's service department), along with an explanation of the claim to ALLWELL LLC. Please package the Cigar Cooler Humidor carefully in its original packaging material to avoid damage in transit. Please retain the original box and packaging material. Under this warranty, ALLWELL will repair or replace any parts found defective. This warranty is not transferable. After the expiration of the warranty, the cost of labor and parts will be the responsibility of the original owner of the unit.

THIS WARRANTY DOES NOT COVER:

- Acts of God, such as fire, flood, hurricanes, earthquakes and tornadoes.
- Damage, accidental or otherwise, to the Cigar Cooler Humidor while in the possession of a consumer not caused by a defect in material or workmanship;
- Damage caused by consumer misuse, tampering, or failure to follow the care and special handling provisions in the instructions.
- Damage to the finish of the case, or other appearance parts caused by wear.
- Damage caused by repairs or alterations to the product by anyone other than authorized by the manufacturer.
- Freight and Insurance cost for the warranty service.

DISCLAIMER OF IMPLIED WARRANTIES; LIMITATION OF REMEDIES

CUSTOMER'S SOLE AND EXCLUSIVE REMEDY UNDER THIS LIMITED WARRANTY SHALL BE PRODUCT REPAIR OR REPLACEMENT AS PROVIDED HEREIN. CLAIMS BASED ON IMPLIED WARRANTIES, INCLUDING WARRANTIES OF MERCHANTABILITY OR FITNESS FOR A PARTICULAR PURPOSE, ARE LIMITED TO ONE YEAR OR THE SHORTEST PERIOD ALLOWED BY LAW, BUT NOT LESS THAN ONE YEAR. ALLWELL SHALL NOT BE LIABLE FOR CONSEQUENTIAL OR INCIDENTAL DAMAGES SUCH AS PROPERTY DAMAGE AND INCIDENTAL EXPENSES RESULTING FROM ANY BREACH OF THIS WRITTEN LIMITED WARRANTY OR ANY IMPLIED WARRANTY. SOME STATES AND PROVINCES DO NOT ALLOW THE EXCLUSION OR LIMITATION OF INCIDENTAL OR CONSE- QUENTIAL DAMAGES, OR LIMITATIONS ON THE DURATION OF IMPLIED WARRANTIES, SO THESE LIMITATIONS OR EXCLUSIONS MAY NOT APPLY TO YOU. THIS WRITTEN WARRANTY GIVES YOU SPECIFIC LEGAL RIGHTS. YOU MAY ALSO HAVE OTHER RIGHTS THAT VARY FROM STATE TO STATE.

To obtain service or information, contact

ALLWELL via email at info@allwellelectric.com

Product contents and specifications may change without notice.

Copyright © 2014 ALLWELL LLC

WWW.ALLWELLELECTRIC.COM